SINUWA®

KAYA-PEN

OUR MISSION

Since we were establish and started production in 1977, our mission has been adhere to a policy focused on quality and customer satisfaction. With over 47 years of experience; we seek, design, and produce better, newer, higher quality, more efficient, and more durable products for our customers without deviating from this mission.

OUR VISION

We have envisioned ourselves as a leading global company, with a dynamic and innovative approach towards the changes in the world, establishing our company in global markets beyond the national boundaries; increasing our presence by successfully maintaining our operations; and offering high quality products meeting the national and international standards.

Quality Policies

High Quality And Productivity

Adopting international quality standards
Following technolocigical developments
Prioritizes development and research

Customer Satisfaction

Open and responsive to customer feedback
Following the delivery date

Environmental Awarenes And Work Safety

Following environmentally friendly and protective policies
Paying attention to safety of employees
Improving production with training and investment

Environment Policies

01

Following sustainable environment and energy policy

We are aware of leaving a healthy nature for the next generations is only possible with ecofriendly policies!

02

Waste Cycle And Control

We ensure environmental sustainability by managing chemical risks, wastewater, and emissions to minimize our impact on nature!

03

Environment Management

We are planning procedures compliant with all relevant legal regulations such as current laws, regulations, and statutes related to environmental management, as well as international standards!

04

Saving with Technology

We are resarching, following and adopting proper technologies and methods will not harm the envoriment and save money in the use of resource!

05

Creating Environmental Awareness

We aim to continuously improve our practices to protect the environment and minimize any negative impacts from our production processes!

OUR MOTTO !

For Places Where Quality Meets Aesthetics...

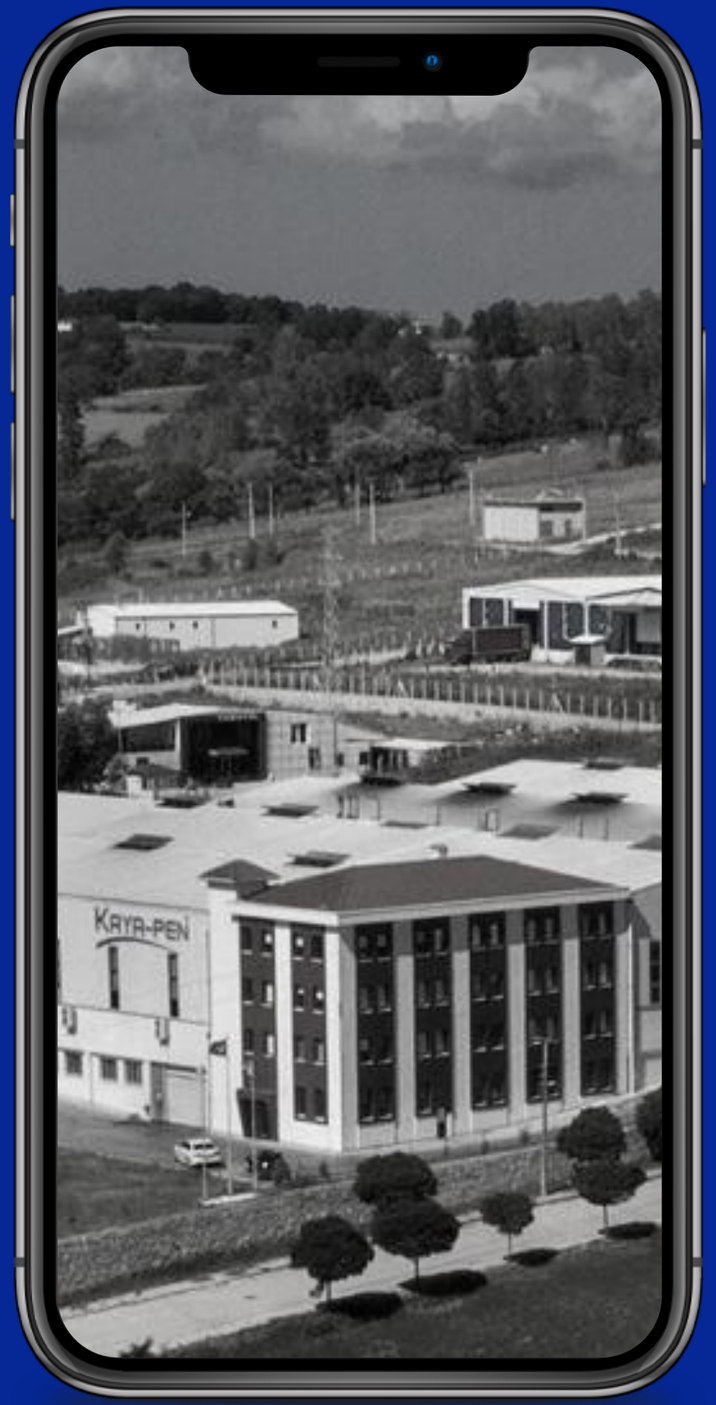

- With more than 400 staff 7/24 production volume
- More than 100 companies from Europe, Nothern European countries, Central Asian countries, Balkan countries, Noth African regions, South Korea.

- Envorimentally friendly facility approval by Turkish Ministry of Envoriment.
- 20.000 m^2 indoor, 56.000 m^2 total facility.
- 2025 target is to produce in a total area of 40.000 m^2 indoor and 56.000 m^2 total by the end of year.
- More than 70 domestic distributors.
- R&D Design Team and Quality Control Unit.

Our Certificates

TÜRK STANDARDLARI ENSTİTÜSÜ
TÜRK STANDARDLARINA UYGUNLUK BELGESİ
TURKISH STANDARDS INSTITUTION
CERTIFICATE OF CONFORMITY TO TURKISH STANDARDS

Markanın Tanımı — Description of the Mark
TSE veya/or TSE veya/or TSE

BELGE NUMARASI *REFERENCE NUMBER OF LICENCE*	022688-TSE-01/02
BELGENİN İLK VERİLİŞ TARİHİ *DATE OF FIRST ISSUE OF LICENCE*	11.06.2012
BELGENİN SON GEÇERLİLİK TARİHİ *LICENCE VALID UNTIL*	11.06.2023
BELGE SAHİBİ KURULUŞUN ADI *NAME OF THE LICENCE HOLDER*	KAYA-PEN PLASTİK SANAYİ TİCARET LİMİTED ŞİRKETİ
BELGE SAHİBİ KURULUŞUN ADRESİ *ADRESS OF THE LICENCE HOLDER*	ORGANİZE SANAYİ BÖLGESİ, 8. CAD. NO:5, DEMİRCİ KÖYÜ SİNOP/TÜRKİYE
ÜRETİM YERİ ADI *NAME OF THE MANUFACTURING PLACE*	KAYA-PEN PLASTİK SANAYİ TİCARET LİMİTED ŞİRKETİ
ÜRETİM YERİ ADRESİ *ADRESS OF THE MANUFACTURING PLACE*	ORGANİZE SANAYİ BOLGESİ SİNOP / TÜRKİYE
İPTAL EDİLEN BELGE NUMARASI (Varsa) *INDICATION OF SUPERSEDED LICENCE (if any)*	
TESCİLLİ TİCARİ MARKASI *REGISTERED TRADE MARK*	
İLGİLİ TÜRK STANDARDI *RELATED TURKISH STANDARD*	TS EN 1906: 2008+A1:2013

BELGE KAPSAMI
SCOPE OF LICENCE

* DOOR LEVER HANDLES
- CATEGORY OF USE : GRADE 3
- DURABILITY : GRADE 6
- DOOR MASS : ---
- FIRE RESISTANCE :GRADE 0
- SAFETY : GRADE 0
- CORROSION RESISTANCE : GRADE 3
- SECURITY : GRADE 0
- TYPE OF OPERATION : TYPE A (Spring-assisted Furniture) and TYPE U (Unsprung furniture)

e-imzalı/e-signed
02.06.2022
On Behalf Of The Head Of Certification Center
NURAY BALABAN
SAMSUN VICE CERTIFICATION MANAGER

*This certificate also shows that the production place of the certified product meets the requirements of Institute.
*This certificate under any circumstances cannot be changed, duplicated partially or in a way that makes it difficult to read and erasure cannot be done.
*TSE * Address: Organize Sanayi Bölgesi Erdoğan Cebeci Bulvarı Sosyal Tesisler Alanı Kutlukent SAMSUN * Telephone: 0-362-266 40 22 Santral: 0-362-266 40 20 - 21* Fax: 0-362-266 40 23
*TSE HEAD OF CERTIFICATION CENTER; Address: Necatibey Cad. No:112 06100 Bakanlıklar/ANKARA – Telephone: 0 312 416 64 81 / 416 64 27, Fax:0 312 416 66 17 E-mail :bmb@tse.org.tr , web : www.tse.org.tr

Please check the accuracy and validity of the certificate from **https://evrakkontrol.tse.org.tr/BelgeDogrulama.aspx?p=zyweu8xd**

1 / 1

Evidence of Performance

Hardware for windows and door-height windows EN 13126-3 : 2011

ift ROSENHEIM

Test Report
No. 20-001645-PR01
(PB+KB-005-03-en-01)

Client	KAYA-PEN PLASTIK SAN. VE TIC. LTD. STI. OSB 8 CAD. No: 5 57000 MERKEZ / SINOP Turkey
Product	Rotating handle with click mechanism
Designation	Aluminum Window Handle Art. No.: KP5011.101.ST
Performance-relevant product details	Material: Aluminum alloy Mounting distances: 43 mm Method of attaching: screws The number of fasteners: 2 pc Fasteners: M5 screws Handle length: approx. 125 mm Handle housing (WxLxH): 65 mm x 28 mm x 12 mm
Special features	-/-

Result

Classification according to EN 13126-3 : 2011

Category of use	Durability resistance	Mass	Fire resistance	Safety in use	Corrosion resistance	Security	Applicable part	Test sizes
2	4/180	-	0	1	5	0/0	3/C1	-

ift Rosenheim
22.11.2021

Konrad Quienzglaser, Dipl.-Ing. (FH)
Head of Testing Department
Security/Safety Testing

Erwin Heimbuchner
Opening Testing Officer
Security/Safety Testing

Basis
EN 13126-1 : 2011
EN 13126-3 : 2011

Test standards:
EN 13126-3 : 2011

Equivalent national versions (e.g. DIN EN)

Representation

Instructions for use
This test report demonstrates compliance with the requirements for (ift & turn, tilt-first and turn-only hardware as per EN 13126-8 : 2017

This test report does not replace the EC Certificate of Conformity. Observe the provisions of EN 13126-8 : 2017 for marking and evaluation of conformity of construction products.

Validity
The data and detailed results given refer solely to the tested / described test specimens. Classification remains valid as long as the product and the above basis remain unchanged. The results can be applied under the manufacturer's own liability subject to observance of the relevant specifications set out by the applicable product standard. This test/evaluation does not allow any statement to be made on any further characteristics regarding performance and quality of the construction product, in particular the effects of weathering and ageing were not taken into account.

Notes on publication
The ift-Guidance "Advertising with ift test documents" applies. The cover sheet can be used as an abstract.

The report contains a total of 12 pages.

TÜV NORD

CERTIFICAT

Pour le Système de Management selon la norme
ISO 9001 : 2015

L'organisme de certification TÜV NORD CERT GmbH confirme par la présente, comme résultat de l'audit, de l'évaluation et de la décision de certification conformément à ISO/IEC 17021-1:2015, que l'organisation

Kaya-Pen Plastik San. ve Tic. Ltd. Şti.
Sinop O.S.B., 8.Cad., No 5, Merkez,
TR-57000 Sinop,
Turquie

KAYA-PEN

exploite un système de management conforme aux exigences de la norme ISO 9001 : 2015, et qu'il fait l'objet d'une surveillance de conformité pendant la période triennale de validité du certificat.

Domaine suivant

Conception, fabrication et distribution d'accessoires pour portes et fenêtres

Numéro d'enregistrement 44 100 17530023
Rapport d'audit N° TR 1693

Valable du 2022-04-18
Valable jusqu'au 2025-04-17
Certification initiale 2017

Organisme Certificateur
du TÜV NORD CERT GmbH

Istanbul, 2022-04-18

TÜV NORD CERT GmbH — Am TÜV 1 — 45307 Essen — www.tuev-nord-cert.com

IAF — DAkkS Deutsche Akkreditierungsstelle D-ZM-12007-01-00

SINUWA®

2016 – ...

The material of our handles is a solid metal aluminum, coated with anodized coating technology. Anodizing provides protection against moisture and corrosion, also allowes long-term usage without rusting. This enables us to produce handles with durable, ergonomic with good design.

Production Process

01 Molding

02 Foundry

03 Press Shop

04 Plastic Injection

05 Iron Processing

06 Alkaline Zinc Coating

07 Anodized Coating

08 Surface Treatment Line

09 Electrostatic Powder Coating Line(GEMA Cabeen and Guns)

10 Assembly and Packing

11 Robot Sanding ve Robot Polishing

12 Quality Control Laboratory

13 R&D and Design

14 Automation Machinery Production Department

15 Shipment And Transportation

What do we produce?

- PVC Door Handles
- Wooden Room Door Handles
- Hebe-Schibe Handles
- Window Handles
- General Hinges ve 3D Hinge
- Zamak Items

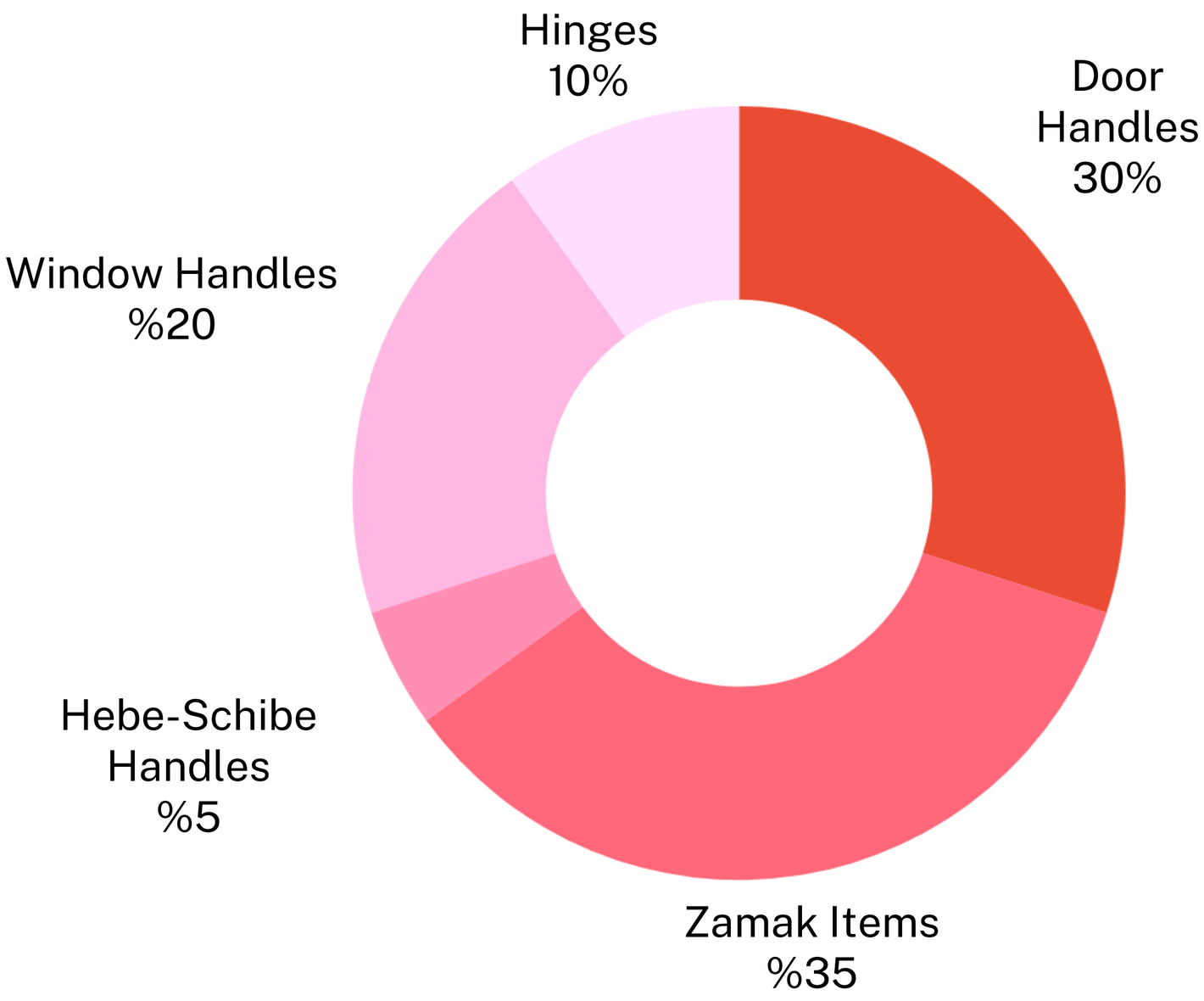

QUALITY CONTROL

Tests and Documentation Process

2023 SUMMARY

Annual Production Volume

- 4.876.296 door handles
- 8.121.300 window handles
- 15.000.000 hinges
- 28.050.000 zamak items

Anodized Coated Room Door Handles

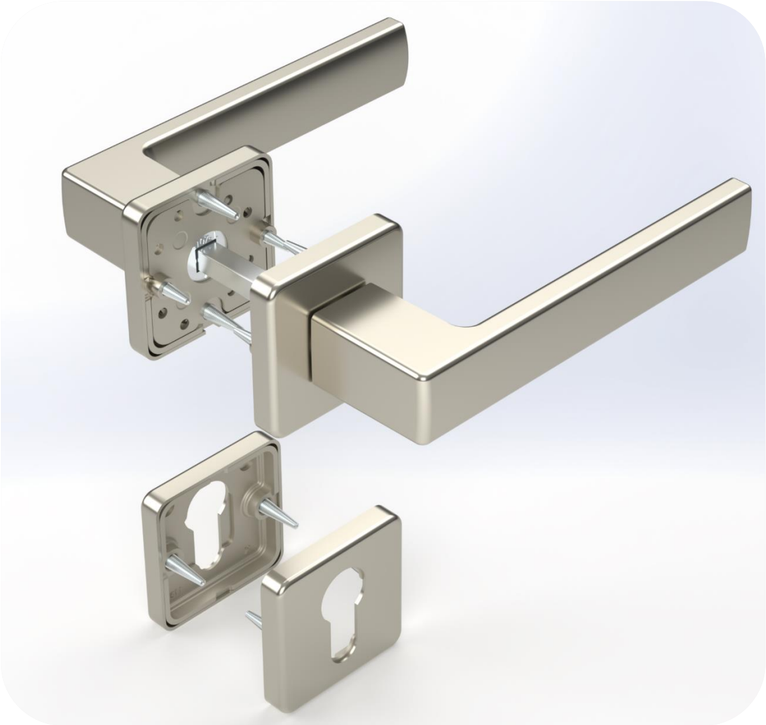

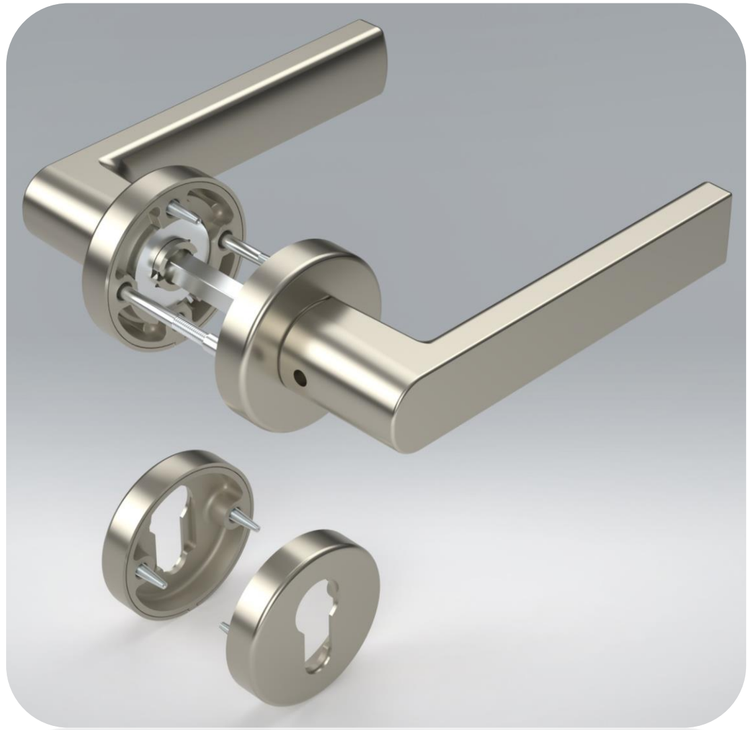

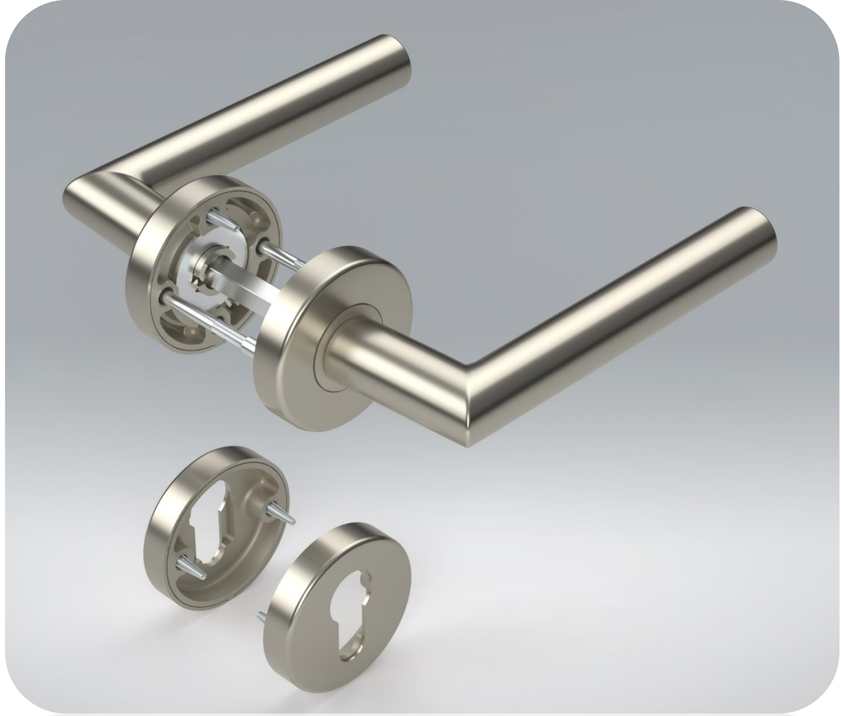

Powder Coated Room Door Handle

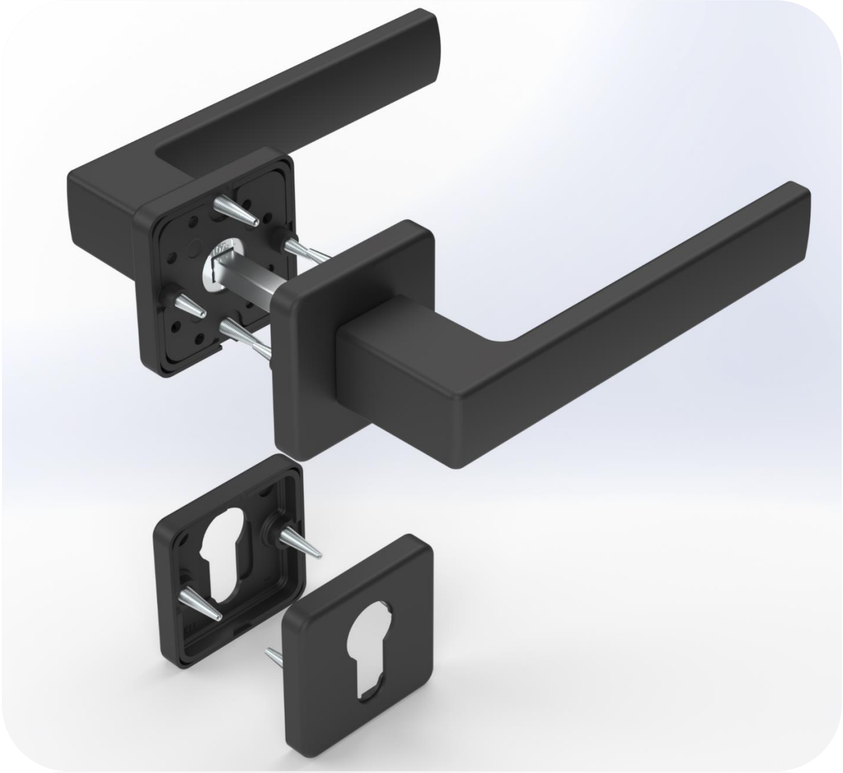

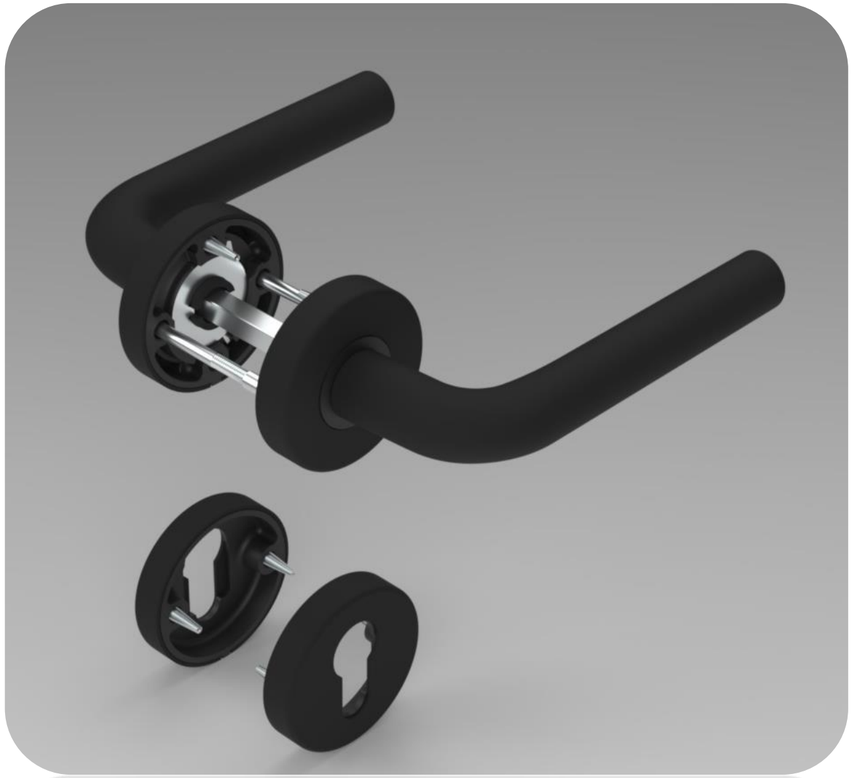

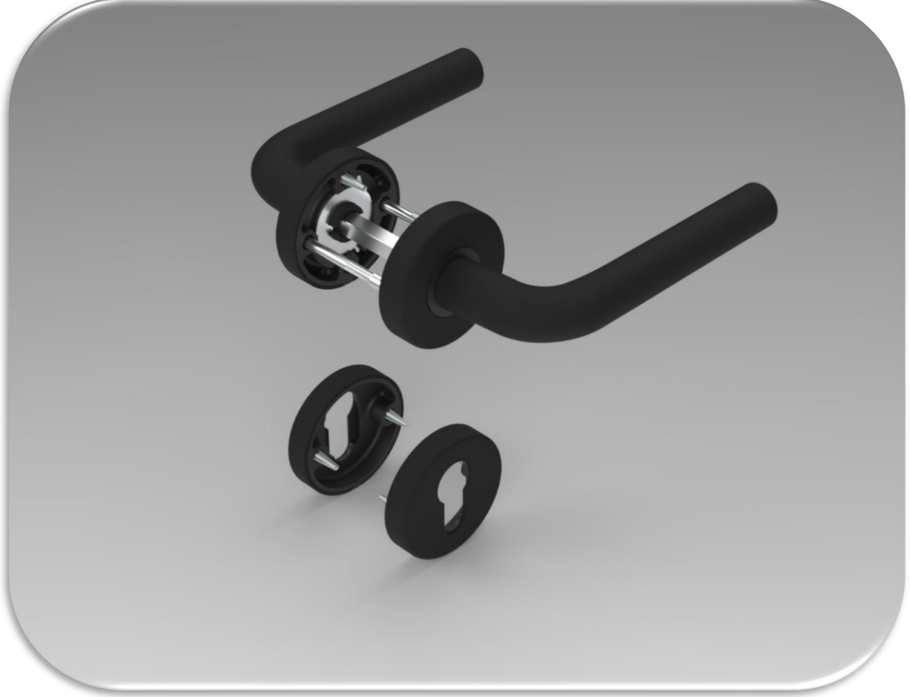

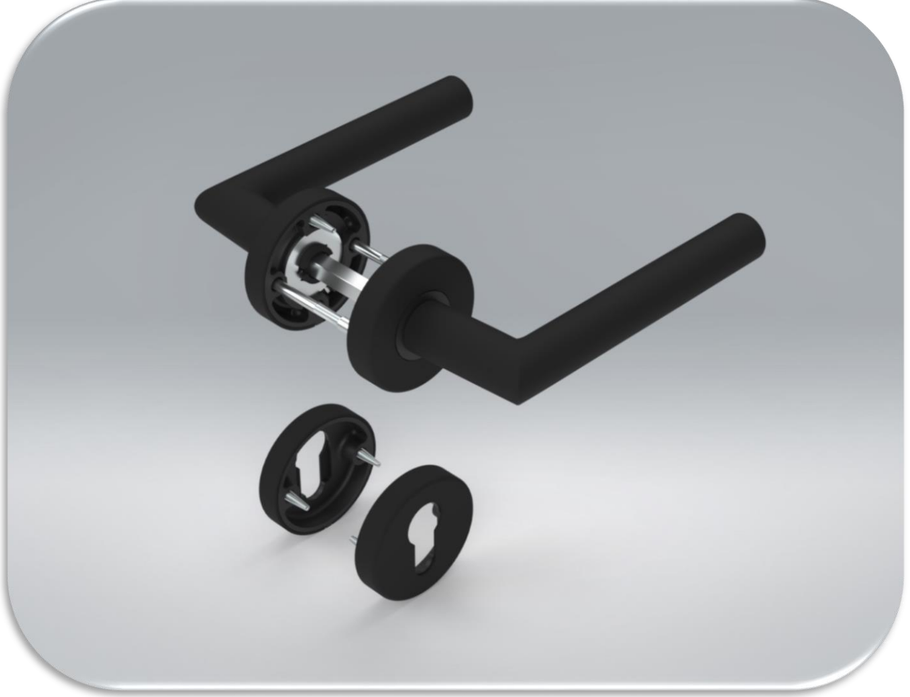

Anodized Coated Door Handles

Powder Coated Door Handles

Anodized Coated Window Handles

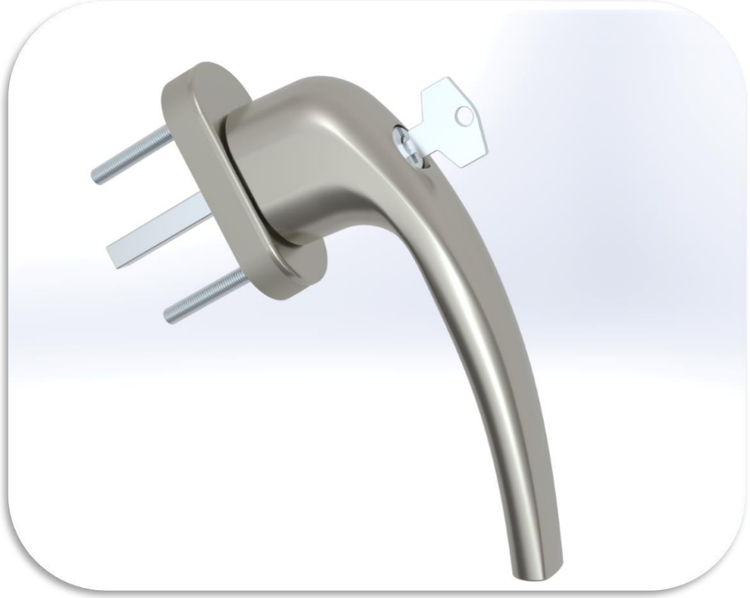

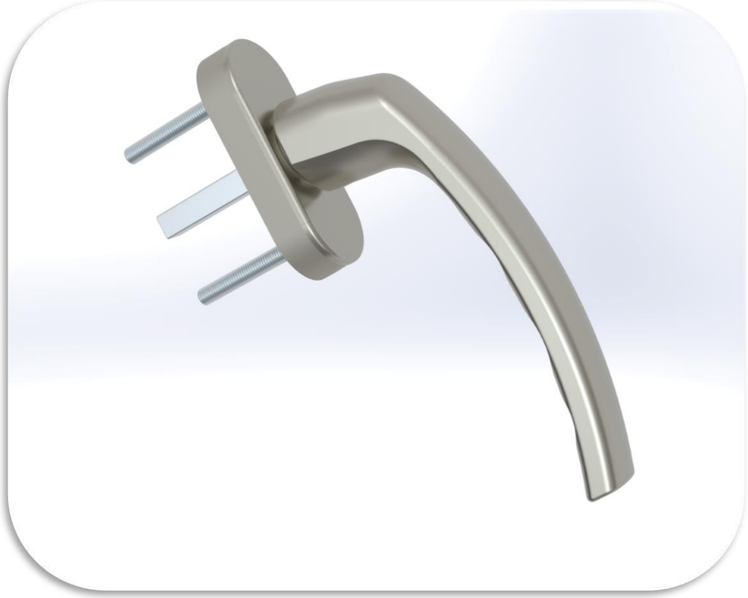

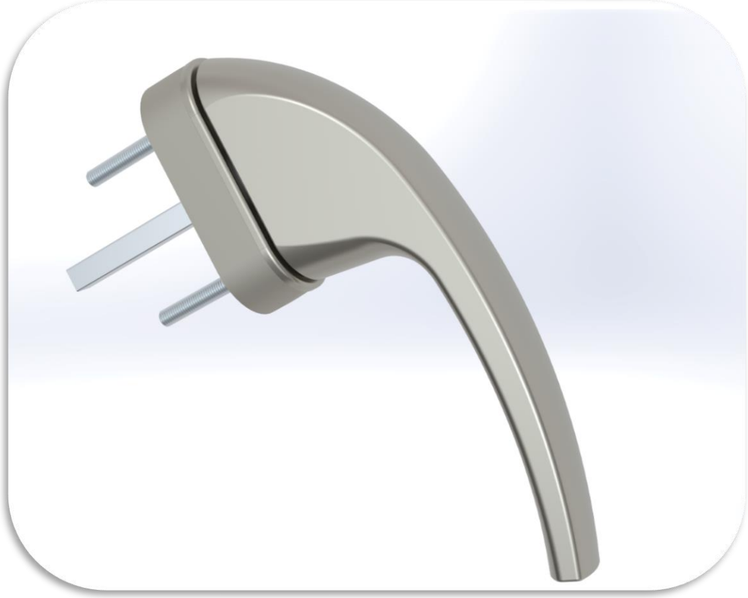

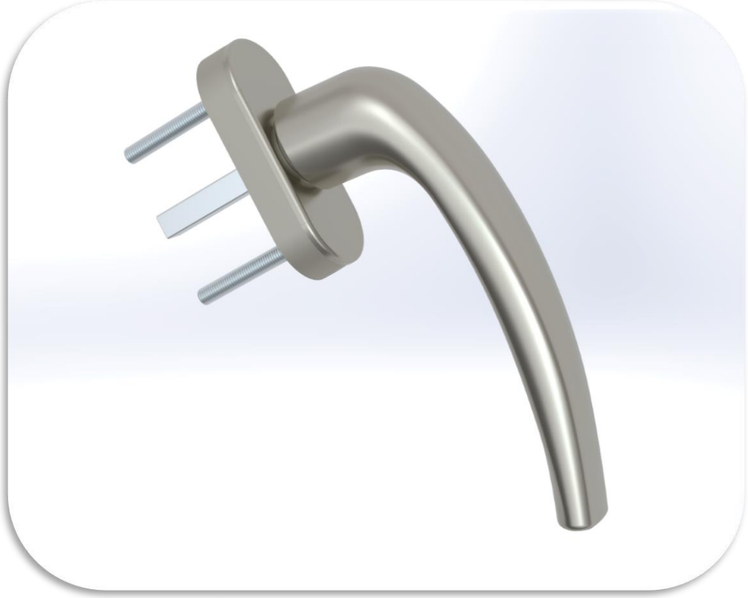

Powder Coated Window Handles

Anodized Coated Hinges

Powder Coated Hinges

Espagnolette Striker

Mullion Connector

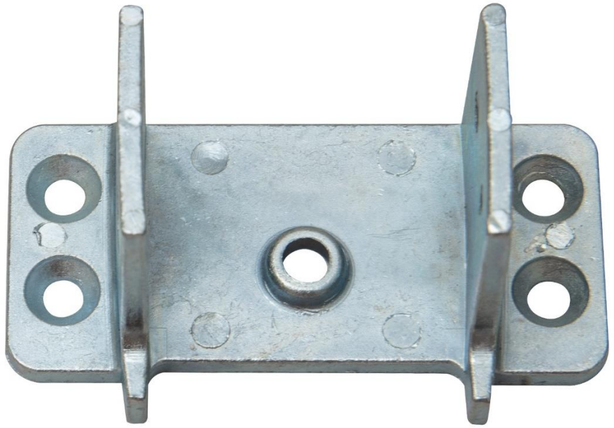

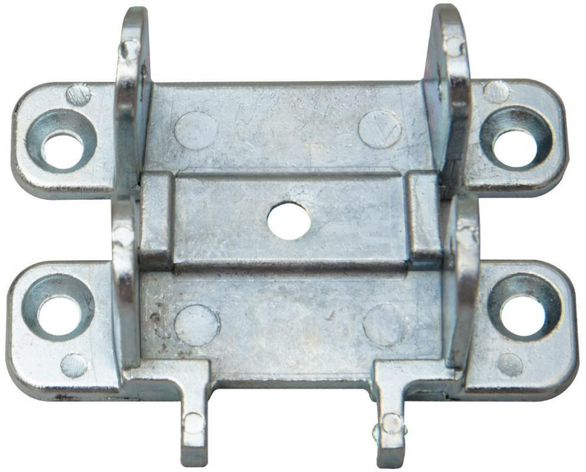

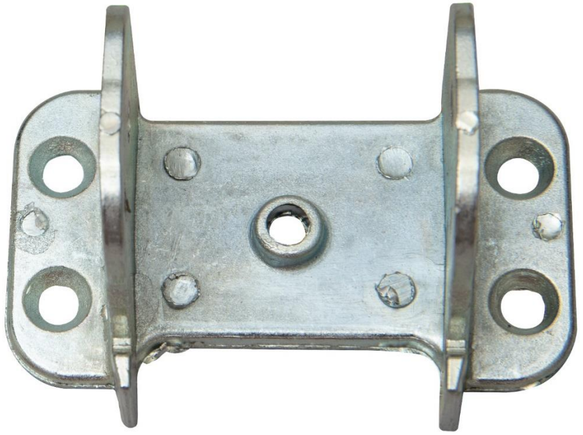

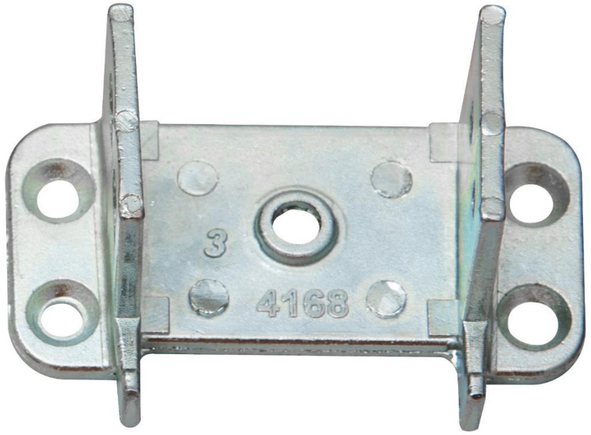

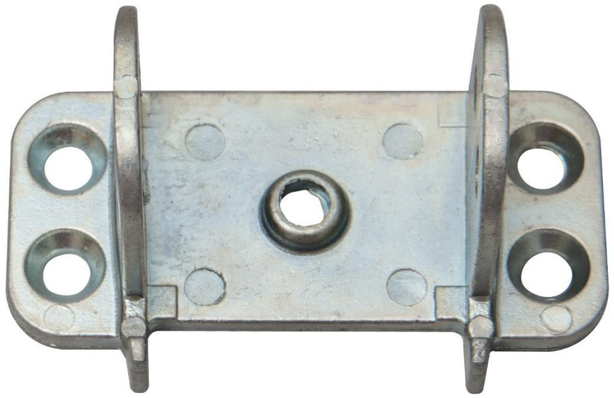

Corner Joint

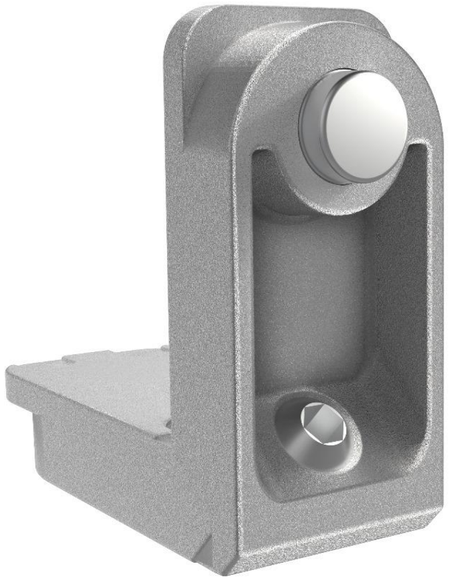

Thank you !

KAYA-PEN®

SINUWA®