3DGENCE
SERVICES

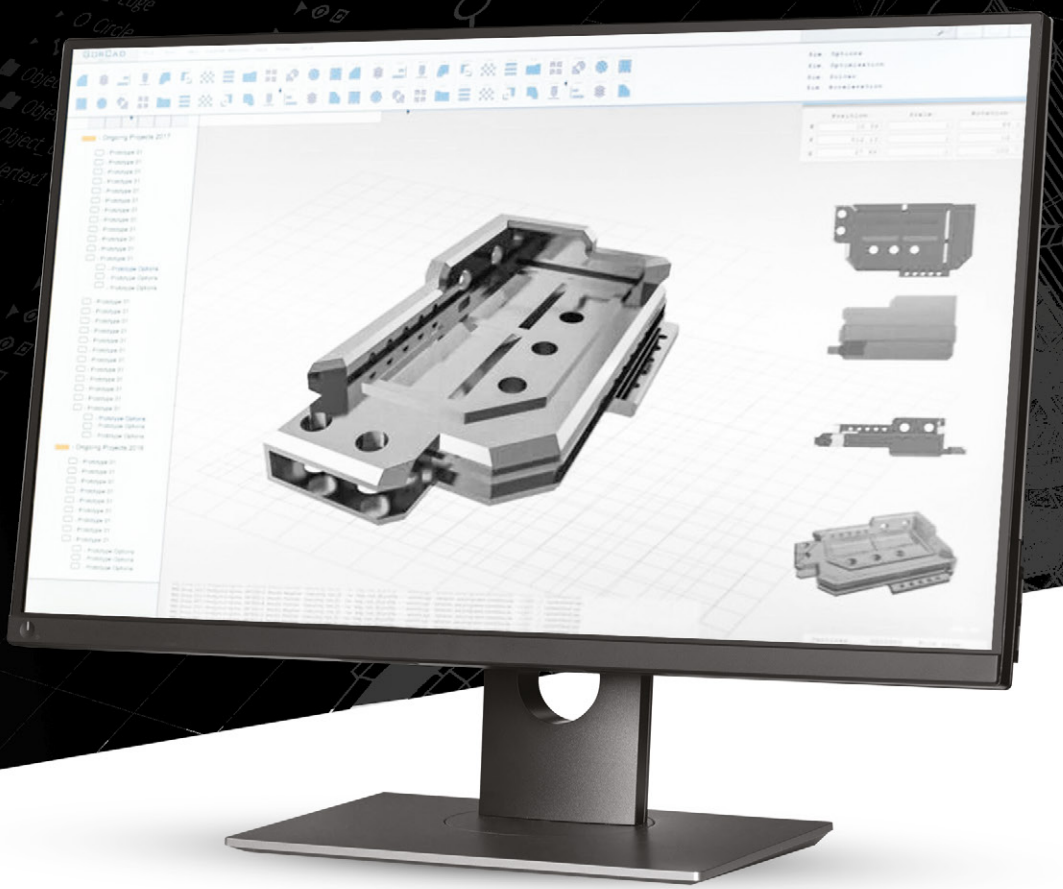

3D PRINTING

ENGINEERING SERVICES

R&D OUTSOURCING

3D SCANNING

OUR CUSTOMERS

VW · ZF · Miele · WÜRTH · SIEMENS · OSRAM · SCHUNK

www.3dgence.com

3D PRINTING

Multiple technologies avaiable FFF, MJF, SLS, DMLS/SLM, SLA, Polyjet

Wide range of materials

Post-processing - optional finishing treatment

Support and advice on technology and material selection

R&D OUTSOURCING

Complete R&D support in the areas of:

- Mechanical and Construction
- Electrical, Electronic and Automation
- Software Engineering
- Prototype production
- Production scale-up

3DGENCE SERVICES

ENGINEERING SERVICES

3D Modeling/ 3D Design

Technical documentation development

Rendering

Design with consideration of requirements of additive technologies

3D SCANNING

Stationary and on-site scanning. Developing documentation based on scanned object.

TURNKEY R&D SERVICES FOR YOUR PROJECTS

Submit product specifications

Case analysis

Feasibility, possible solutions and timeframe presented for customer approval.

DESIGN AND DEVELOPMENT OF THE PRODUCT IN THE AREAS:

Mechanical/ Construction

Electrical/Electronic/ Automation

(possibility to prepare customized electronics)

Software and integration with existing systems

Compliance of the built solution with standards and directives

Prototype production

Ready to implement documentation for production start or scale-up

CONTACT DETAILS

CONTACT US

Our engineers will answer your questions and help you choose the most suitable solution.

WHY US?

- We operate globally
- Backed by a team with years of experience in the field of additive manufacturing technologies, design and machine construction
- Trusted by thousands of engineers around the world

USA

3DGence America
Inc. Dallas, Texas

+1.855.466.3813
Industrial3D@3dgence.com

GERMANY

3DGence GmbH,
Gradignanstraße 4, 64319 Pfungstadt

+49 151 259 533 24
3dservices@3dgence.com

POLAND

3DGence sp. z o.o.
Graniczna 66, 44-178 Przyszowice

+48 517 921 768
3dservices@3dgence.com