GÜRPLAST

ÖNSÖZ

GÜRPLAST PLASTİK SANAYİ A.Ş. 1984 yılında; otomotiv sanayinin önemli merkezlerinden biri olan Bursa'da yan sanayi olarak kurulmuştur. Özellikle 80'li yıllarda büyük ivme kazanan otomotiv sanayinin paralelinde kendini geliştirmiştir.

Dünyada her geçen gün büyüyen ve gelişen imalat sanayi sektöründe artan uluslararası rekabet karşısında üretkenliğini, ürün kalitesini yükseltecek yatırımlara önem vermiş ve vermektedir. Alman Sertifikasyon Kurumu "TÜV Management Service" tarafından Ağustos 2002'de "ISO 9002;1994 Kalite Yönetim Sistemi" belgesi ve otomotiv sektöründe önemli yere sahip "ISO/TS 16949:1994 Sertifikası" ile belgelendirilmiştir. Ocak 2004'de "ISO 9001;2002 Kalite Yönetim Sistemi" belgesi "ISO/TS 16949:2002 Sertifikası" sistemin gereklerine uygun olarak güncellenmiştir.

Bugün Bursa-Ovaakça bölgesinde 2.000 m² kapalı, 2.000 m² açık alanda çalışmaktadır. Kalıp tasarım ve imalatını sahip olduğu ileri teknoloji CNC tezgahlar yapılmaktadır.

Gelişen teknolojiye ayak uydurmak için personel eğitimine ve modern araç gereçlere önem verilmektedir.

INTRODUCTION

GÜRPLAST PLASTIC INDUSTRY CO. was established as a subsidiary industry in Bursa, one of the important bases of the automotive industry. This company developed parallel to accelerating automotive industry especially in 1980s.

Our company gave weight to investments which could raise its productivity, product quality in the face of continuously increasing international competition in growing and developing manufactured goods industry, and today has the same strategy. Company was also certificated with ISO 9002 quality certificate in 2002 and with ISO/TS 16949:1664 certificate, which has a considerable place in automotive industry by German certification Institution, TUV Management Service. Then, ISO 9001; 2002 Quality Management System certificate has been updated according to the standards of ISO/TS 1949; 2002 certificate system on January 2004.

Recently, our company operates in Bursa-Ovaakça region in a 2,000 m2 closed area and a 2,000 m2 open area. Mold design and production is carried out by advanced technology CNC machines.

We give importance to education for our personnel and modern equipments in order to keep up with developing technology.

CERTIFICATE

Management system as per
ISO/TS 16949:2002
(2nd edition, 2002-03-01)

Evidence of conformity with the above standard has been furnished and is certified in accordance with TÜV CERT procedures for

GÜRPLAST PLASTİK SANAYİİ VE TİCARET A.Ş.
Yeni Yalova Yolu 13. Km Ovaakça Mevkii
Bursa / Turkey

Scope

Production of injected thermoplastic parts for the automotive industry
without product design responsibility (according to section 7.3)

IATF Registration No. 0052199 — Valid from 2007-05-08
Certificate Registration No. 44 111 066809 — Valid until 2010-03-22

TÜV CERT Certification body
at TÜV NORD CERT GmbH — Essen, 2007-05-08

This certification was conducted in accordance with the TÜV CERT auditing and certification procedures and is subject to regular surveillance audits.

TÜV NORD CERT GmbH Langemarckstrasse 20 45141 Essen www.tuev-nord-cert.com

Page 1/1

02-IAQ-QMC-01021

TÜV NORD

CERTIFICATE

Management system as per
DIN EN ISO 9001 : 2000

In accordance with TÜV CERT procedures, it is hereby certified that

Gürplast Plastik Sanayii ve Ticaret A.Ş.
Yeni Yalova Yolu, 13. Km., Ovaakça Mevkii,
TR-16335 Bursa,
Turkey

applies a quality system in line with the above standard for the following scope

Production of injected thermoplastic parts for the automotive industry

Certificate Registration No. 44 100 063681-E6 — Valid until 2010-03-14
Audit Report No. TR 586 — Initial certification 2003-01-31

TÜV CERT Certification Body
at TÜV NORD CERT GmbH — Istanbul, 2007-03-15

This certification was conducted in accordance with the TÜV CERT auditing and certification procedures and is subject to regular surveillance audits.
TÜV NORD CERT GmbH Langemarckstrasse 20 D - 45141 Essen www.tuev-nord-cert.com

TGA-ZM-30-96-00

TÜV NORD

GÜRPLAST A.Ş KALİTE POLİTİKASI

Ürün ve hizmetlerin gerçekleştirilmesi için yapılan faaliyetlerin ve elde edilen sonuçların fert olarak insanın, ailenin, işyerinin ve toplumun refahı için olması ve bunu başarmanın haklı gururunu her ferdin paylaşması gerektiğine inanmaktayız.

Bu felsefeyi başarabilmemiz için;
- Müşteri tarafından istenen şartname ve standartlara uygun üretim yapmak,
- Müşteriye ürünü en düşük maliyetle sunmak,
- Müşteri isteklerini zamanında üretip teslim etmek,
- Ürün ve hizmet kalitesini artırırken fireleri ve diğer kayıpları azaltmak,
- Çalışanların iş dalları ile ilgili olarak eğitimlerini tamamlamak,
- Çalışanların sosyal ve kültürel aktivitelerini artırmak , pozitif başarıyı paylaşmak,
- Tedarikçilerimize kalite bilincini aşılayarak sürekliliği sağlamak,
- Toplumun bize sunduğu kaynakları iyi değerlendirmek ve çevreye saygılı olmak,
- Yapılan çalışmaları sürekli iyileştirerek mükemmele doğru ilerlemek.

GÜRPLAST A.Ş'nin Kalite Politikası olarak belirlenmiştir.

Bu politikaya ulaşabilmek için bir kalite yönetim sistemi oluşturmayı, devam ettirmeyi, gerekli kaynakları temin etmeyi ve etkinliğini gözden geçirmeyi yönetim olarak taahhüt ederiz. Yaşantımızın her safhasında bu ilkeleri kendimize uyarlamayı, hem ülkemiz hem de yaşanılacak mutlu bir dünya için zorunlu hissetmeliyiz.

GÜRPLAST CO. QUALITY POLICY

We hold the belief that activities done for realization of product and service, and results taken should be for the good of society, company, family and a person, also the proud for this success should be shared by all.

In order to achieve this thought;
- To produce appropriately for demanded specifications and standard requested by customers,
- To present the product to customer at an optimum price,
- To produce and deliver demands in time,
- To reduce losses while upgrading production and service quality,
- To complete workers' education concerning their business line,
- To increase workers' social and cultural activities, achieving positive success,
- To indoctrinate our supplier with quality consciousness and achieve continuity,
- To use the sources of our society affectively and be sensitive against nature,
- Continually keep developing our works and reach the perfect stateis determined as the Quality Policy of GÜRPLAST CO.

In order to achieve this goal, we undertake the responsibility to establish a quality management system and to maintain this system. We should feel responsible for adapting these principles to our works, and be conscious of their benefits to our country and world in our lifetime.

PLASTİK ENJEKSİYON
GÜRPLAST PLASTİK SANAYİ A.Ş. 30 ila 800'lük 13 adet enjeksiyon kapasitesine sahiptir.

PLASTIC INJECTION
GÜRPLAST PLASTIC INDUSTRY CO. has the capacity for 13 injection from 30 to 800 range.

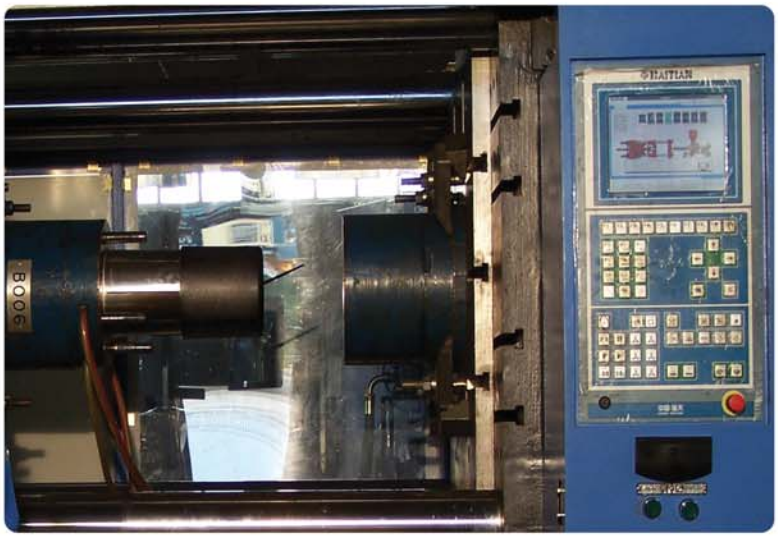

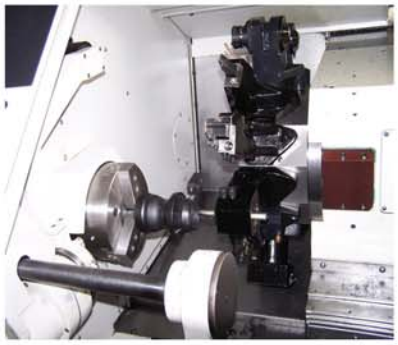

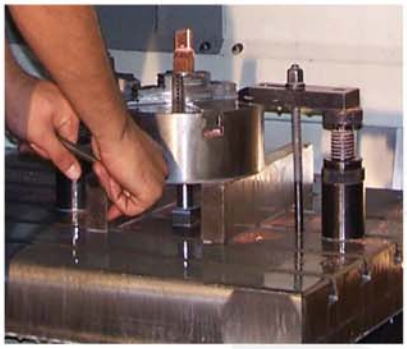

Firmamız Bünyesinde;
Kalıp tasarımı CAD-CAM işlemlerimiz NX5 programı ile yapılmaktadır

In Our Company;
Mold design CAD-CAM processes are carried out by NX5 program.

Tezgahlarımız;

CNC Freze-VTC 300C Dik İşleme Merkezi
CNC Freze- DMC 1035v Dik İşleme Merkezi
CNC Freze DMC 635v Dik İşleme Merkezi
CNC Torna 200 II M (c eksenli)
CNC Erezyon

Our Lathes;

CNC Freze-300C Vertical Machining Centre
CNC Freze- DMC 1035v Vertical Machining Centre
CNC Freze DMC 635v Vertical Machining Centre
CNC Lathe 200 II M (c axis) 635 V
CNC Erosion

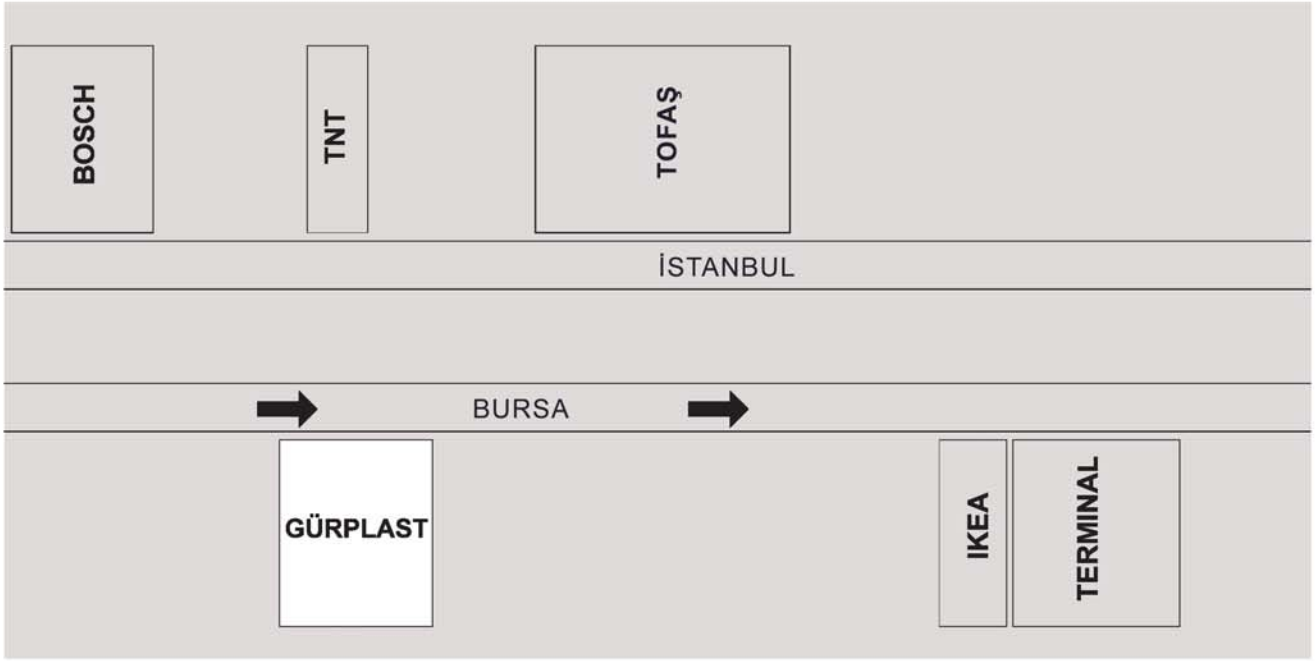
BOSCH
TNT
TOFAŞ
İSTANBUL
BURSA
GÜRPLAST
IKEA
TERMINAL

GÜRPLAST
GÜRPLAST

ORDER NUMBER : 025.00.02.000

CROSS REFERENCE

CONTITECH
4004 N P03
4022 N P03
AIRTECH
34004 KPP
34022 KPP
32618 KPP
FIRESTONE
1T17BS-6W01 M58 6367
GOOD-YEAR
1R 11-713
CF GOMMA
1 T 300 -37
PHOENIX
1DK 22 E-8-9
OEM CODE
SAF 2618
SAF-3.229.0007.02
SAF-3.229.0007.01
SAF-3.229.0007.00
SAF-3.229.2429.00
SAF-3.229.2229.00
SAF-3.229.0029.00
SAF-3.229.2129.00
REMARKS
WEIGHT
1730
MATERIAL
PA66 GF30 BLACK
QUANTITY IN PALETTE
100 pcs

FRONT VIEW

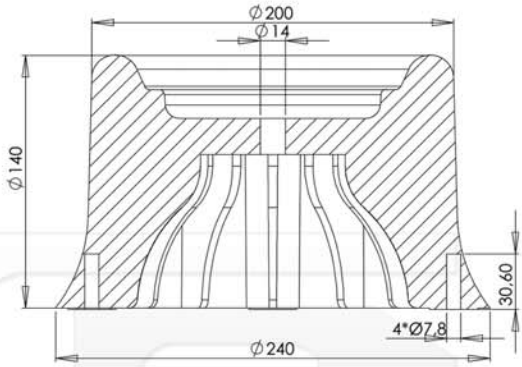

BOTTOM VIEW

ORDER NUMBER : 025.00.02.006

CROSS REFERENCE

CONTITECH
4004 N P03
4022 N P03
AIRTECH
34004 KPP
34022 KPP
32618 KPP
FIRESTONE
1T17BS-6W01 M58 6366
GOOD-YEAR
1R 11-713
CF GOMMA
1 T 300 -37
PHOENIX
1DK 22 E-8
OEM CODE
SAF 2618
SAF-3.229.0007.02
SAF-3.229.0007.01
SAF-3.229.0007.00
SAF-3.229.2429.00
SAF-3.229.2229.00
SAF-3.229.0029.00
SAF-3.229.2129.00
REMARKS
WEIGHT
1730
MATERIAL
PA66 GF30 BLACK
QUANTITY IN PALETTE
100 pcs

FRONT VIEW

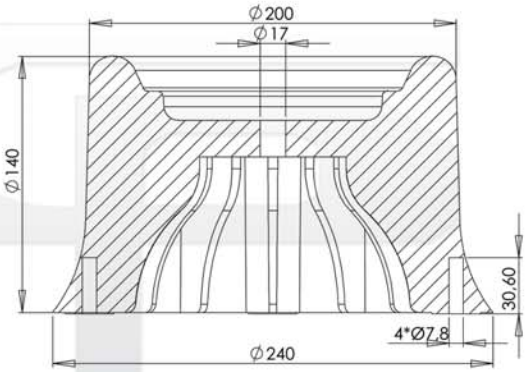

BOTTOM VIEW

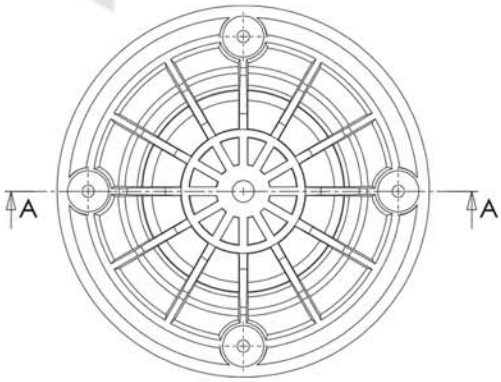

ORDER NUMBER : 025.21.02.000

CROSS REFERENCE

CONTITECH
4022 N P05

OEM CODE
SAF 3.229.0033.00

REMARKS

WEIGHT
1656

MATERIAL
PA66 GF30 BLACK

QUANTITY IN PALETTE
100 pcs

FRONT VIEW

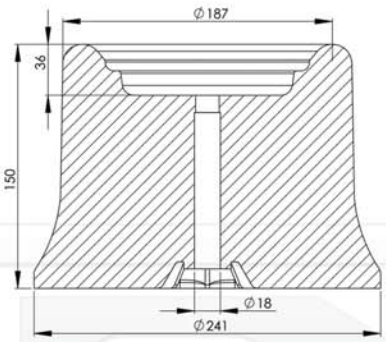

BOTTOM VIEW

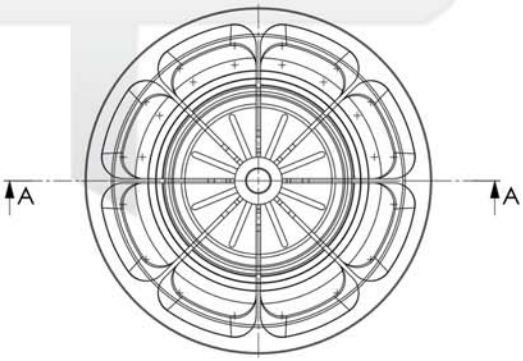

ORDER NUMBER : 025.23.02.000

CROSS REFERENCE

CONTITECH
2621

OEM CODE
SAF 2621

REMARKS

WEIGHT
1875

MATERIAL
PA66 GF30 BLACK

QUANTITY IN PALETTE
100 pcs

FRONT VIEW

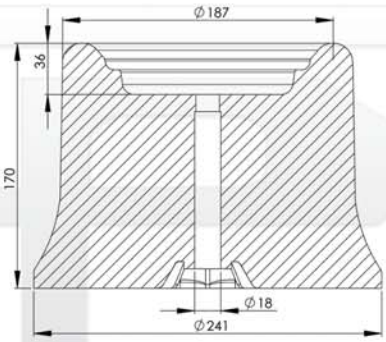

BOTTOM VIEW

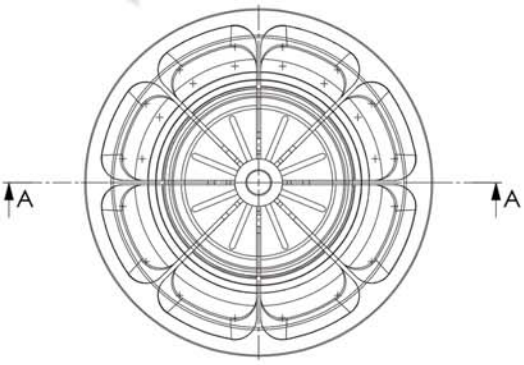

ORDER NUMBER : 025.05.02.003

CROSS REFERENCE

CONTITECH
4156 N P06
4156 N P15
4156 N P16
FIRESTONE
1T 15 M-6 W01 M58 9229
GOOD-YEAR
1 R 12-719
AIRTECH
34156 KPP
34156-02 KPP
CF GOMMA
34156-02 KPP
PHOENIX
1 DK 21 A-2
OEM CODE
ROR 2121 5761
WEWELER- US 35864
SMB UJB 0207
HENDRICKSON HA 100001
FRUEHAUF M001472
NEWAY M00 557 002
REMARKS
WEIGHT
1960
MATERIAL
PA66 GF30 BLACK
QUANTITY IN PALETTE
100 pcs

FRONT VIEW

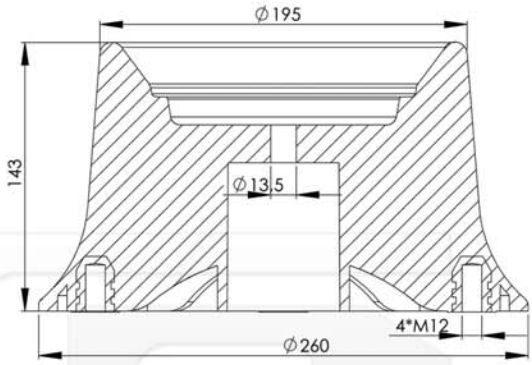

BOTTOM VIEW

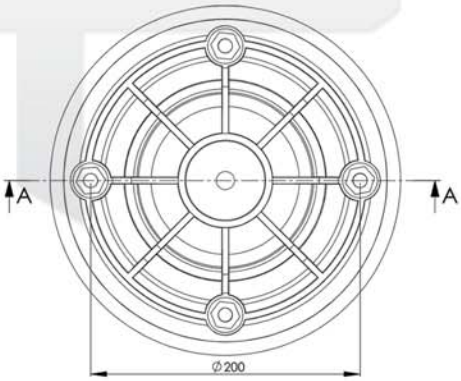

ORDER NUMBER : 025.05.02.004

CROSS REFERENCE

CONTITECH
4156 N P-04
4156 N P-14
FIRESTONE
1T 15 M-6 W01 M58 9082
1T 15 M-6 W01 M58 9361
GOOD-YEAR
1 R 12-092
1 R 12-716
AIRTECH
34156-05 KPP
34156-06 KPP
34156-08 KPP
OEM CODE
NEWAY 905 570 27
NEWAY 905 570 75
HENDRICKSON B 2066
WEWELER US 09361F
TRANSPART 520 728
ROR 2120 8939
REMARKS
WEIGHT
1960
MATERIAL
PA66 GF30 BLACK
QUANTITY IN PALETTE
100 pcs

FRONT VIEW

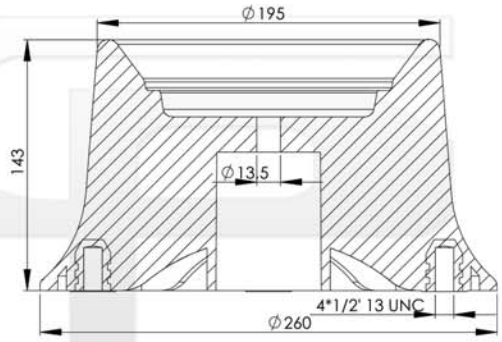

BOTTOM VIEW

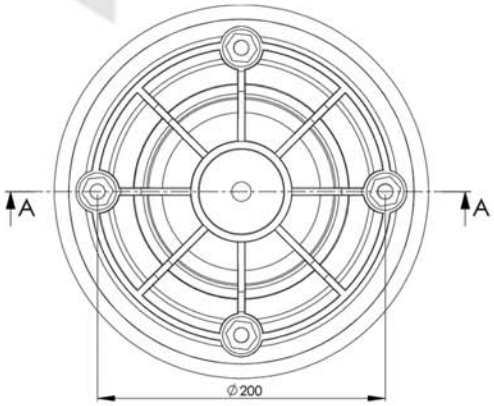

ORDER NUMBER :025.05.02.005

CROSS REFERENCE

CONTITECH

FIRESTONE
1T 15 M-6 W01 M58 8929
GOOD-YEAR
1 R 12-461
AIRTECH
34156-13 KPP

REMARKS

WEIGHT
1986

MATERIAL
PA66 GF30 BLACK

QUANTITY IN PALETTE
100 pcs

FRONT VIEW

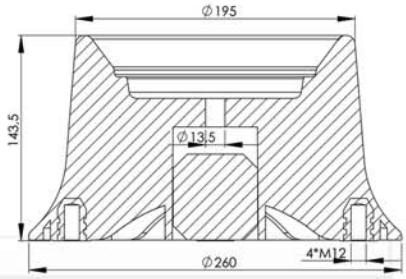

BOTTOM VIEW

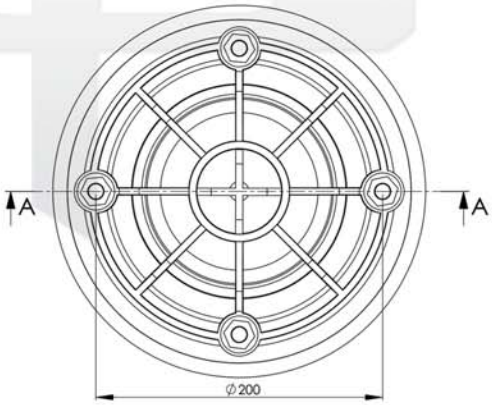

ORDER NUMBER : 025.05.02.006

CROSS REFERENCE

CONTITECH
4156 N P10

OEM CODE
HENDRICKSON HA 100016

REMARKS

WEIGHT
1986

MATERIAL
PA66 GF30 BLACK

QUANTITY IN PALETTE
100 pcs

FRONT VIEW

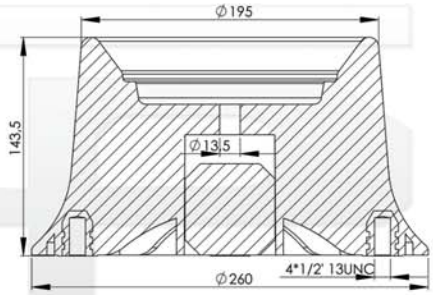

BOTTOM VIEW

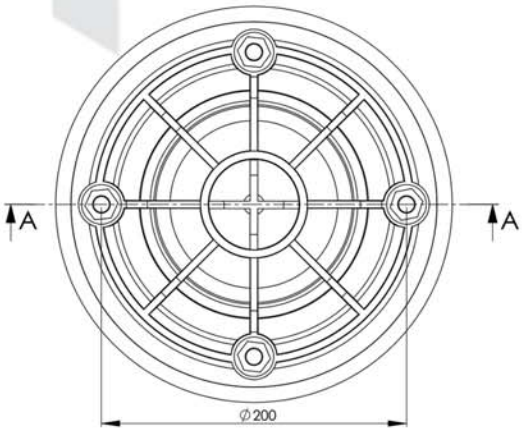

ORDER NUMBER : 025.03.02.000

CROSS REFERENCE

CONTITECH
4158 N P03
4159 NP09
4159 NP11
4157 NP06
AIRTECH
34158 KPP
34159-02 KPP
FIRESTONE
1T 15 MPW-9
W01 M58 8185
W01 379 9131
GOOD-YEAR
1 R12-749
PHOENIX
1 DK 20 B-1

OEM CODE
Weweler- US 06285
Schmitz-750999
REMARKS

WEIGHT
2090
MATERIAL
PA66 GF30 BLACK
QUANTITY IN PALETTE
100 pcs

FRONT VIEW

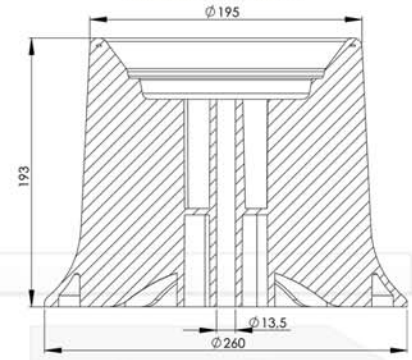

BOTTOM VIEW

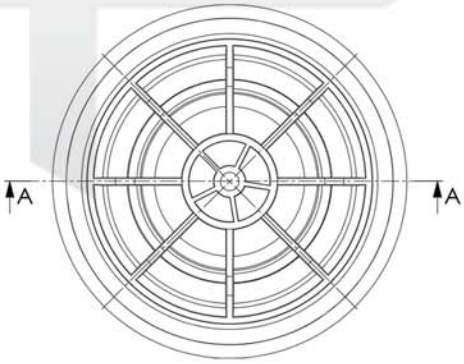

ORDER NUMBER : 027.25.02.000

ORDER N. 025.11.02.000

PLASTIC PUFFER

ORDER NUMBER : 025.18.02.005

CROSS REFERENCE

CONTITECH
4154 NP05

FIRESTONE
1T 15 M-4 W01 S05 7283

AIRTECH
34154 KPP
34154-02 KPP
34154-04 KPP

OEM CODE
RVI-5.010.294.252.B
RVI-5.010.239.252.B

REMARKS

WEIGHT
1488

MATERIAL
PA66 GF30 BLACK

QUANTITY IN PALETTE
100 pcs

FRONT VIEW

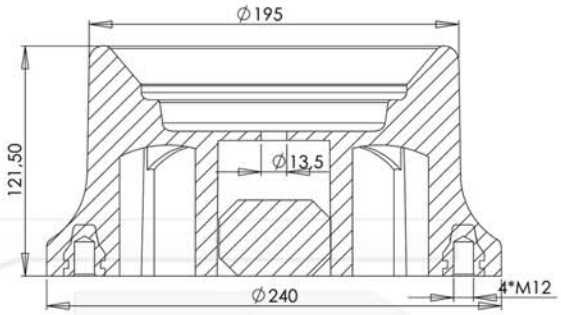

BOTTOM VIEW

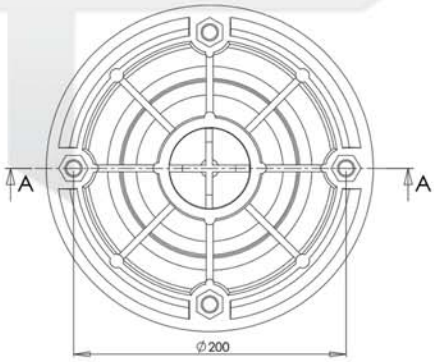

ORDER NUMBER : 025.19.02.000

CROSS REFERENCE

CONTITECH
9 10 S-16 A 382
FIRESTONE
1T 15 ZR6 W01 358 9780
GOOD-YEAR
1R12 189
1R12 303
AIRTECH
34154 KPP
34154-02 KPP
34154-04 KPP
OEM CODE
TRIANGLE 8382
FREIGHTLINER 16-15595-000

REMARKS

WEIGHT
2288
MATERIAL
PA66 GF30 BLACK

QUANTITY IN PALETTE
100 pcs

FRONT VIEW

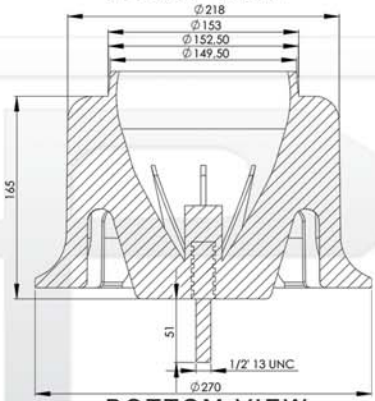

BOTTOM VIEW

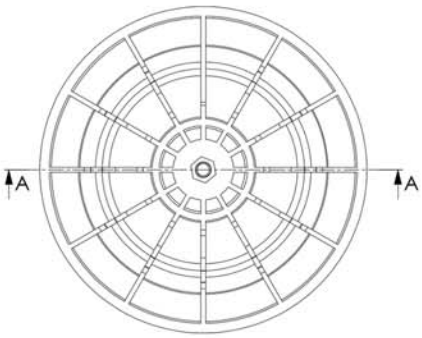

ORDER NUMBER : 025.06.02.000

CROSS REFERENCE

CONTITECH
4157 N P03
4157 N P04
4157 N P05
4157 N P09
FIRESTONE
1 T 15 M 7 W01 M58 6297
GOOD-YEAR
1R 11-111
AIRTECH
34157 KPP
PHOENIX
1DK 21 A-8
OEM CODE
SMB M078580
NEVAY 905 572 33
FRUEHAUF M078580
WEWELER US 07364
WEWELER US 07074
ROR 2122 1307
ROR 2122 2442
DAIMLER CHRYSLER A 946 328
14 01
REMARKS
WEIGHT
1665
MATERIAL
PA66 GF30 BLACK
QUANTITY IN PALETTE
100 pcs

FRONT VIEW

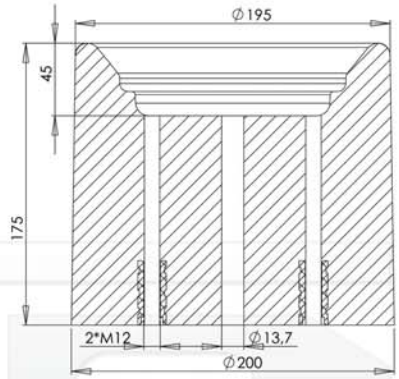

BOTTOM VIEW

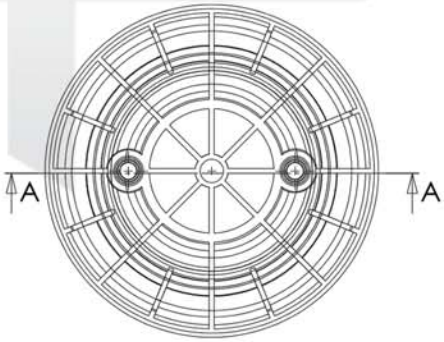

ORDER NUMBER : 025.06.02.001

CROSS REFERENCE

CONTITECH
4157 N P10

OEM CODE
SMB M060924
FRUEHAUF UJB 0975

REMARKS

WEIGHT
1986

MATERIAL
PA66 GF30 BLACK

QUANTITY IN PALETTE
100 pcs

FRONT VIEW

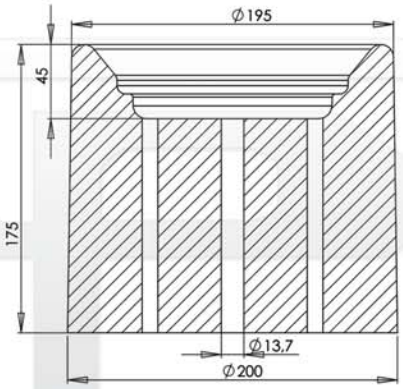

BOTTOM VIEW

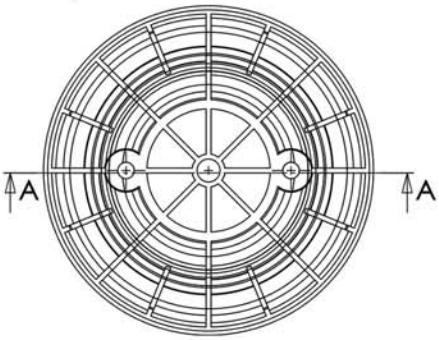

ORDER NUMBER : 025.17.02.003

CROSS REFERENCE
CONTITECH
810 MB
4810 NP05
AIRTECH
3810 KPP
FIRESTONE
1T 19 L-7 W01 M58 6345
GOOD-YEAR
1 R 14-059
CF GOMMA
1 T 19 E-1
PHOENIX
1 D 28 A-2
OEM CODE
DAF 1384273
GRANING 15635
NEVAY 2125632
NEWAY 211586
ROR/MERITOR 21208082
ROR/MERITOR 17204517
RENAULT V.I 5000452939
SAF 2.228.0002.00
SAF 2.228.2402.00
SAF 2.228.2602.00
SAF 2.228.2202.00
SAF 2.228.2102.00
REMARKS
WEIGHT
2318
MATERIAL
PA66 GF30 BLACK
QUANTITY IN PALETTE
100 pcs

FRONT VIEW

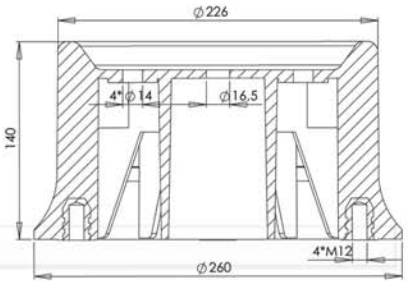

BOTTOM VIEW

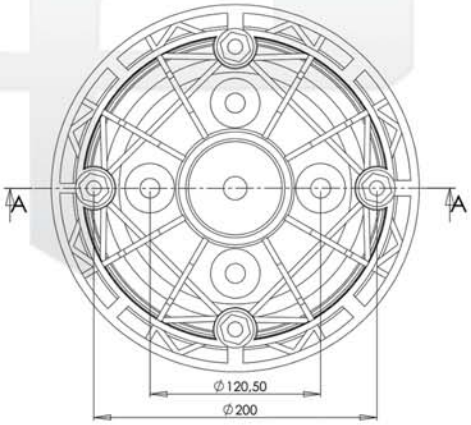

ORDER NUMBER : 025.17.02.0040

CROSS REFERENCE

CONTITECH
4810 N03
AIRTECH
3941 KPP
FIRESTONE
1T 19 L-1 W01 358 9121
GOOD-YEAR

OEM CODE
NEWAY 90557019
NEWAY 90557078

REMARKS

WEIGHT
2318
MATERIAL
PA66 GF30 BLACK
QUANTITY IN PALETTE
100 pcs

FRONT VIEW

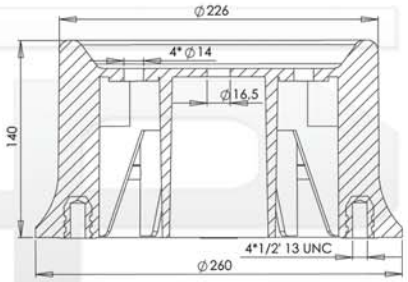

BOTTOM VIEW

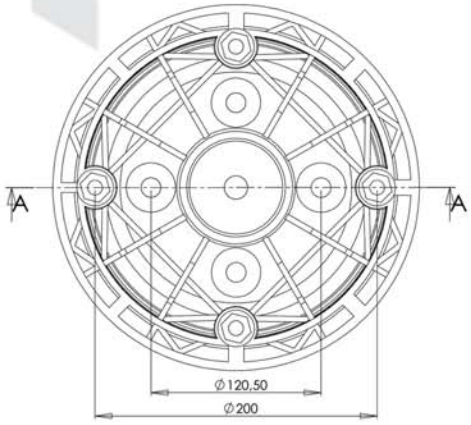

ORDER NUMBER : 025.12.02.003

CROSS REFERANS
CONTITECH
813 MB
811 MB
AIRTECH
3813 KPP
3811 KPP
34813 KPP
FIRESTONE
1 T 19 L-11 W01 M58 6364
GOOD-YEAR
1 R14 -061
CF GOMMA
1 T19 E-2
PHOENIX
1 D28 B-2 E2
OEM CODE
DAF 1384274
GRANNING 15634
HENDRICKSON B2063
NEWAY 22 282 21215633
ROR 21215633
RENAULT 5010130925
SAF 0.229.0003.00-2.229.2103.00-2.229.2403.00-2.229.2603.0
SAMRO 2500009
REMARKS
WEIGHT
2874
MATERIAL
PA66 GF30 BLACK
QUANTITY IN PALETTE
100 pcs

FRONT VIEW

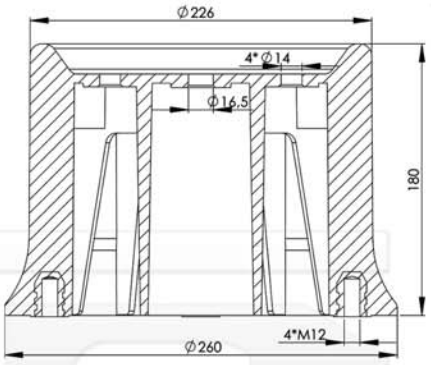

BOTTOM VIEW

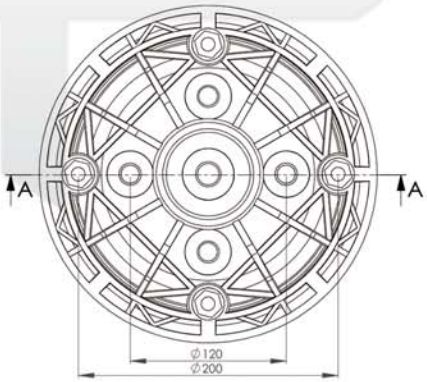

ORDER NUMBER : 025.12.02.004

CROSS REFERENCE

CONTITECH
11 10,5-21 A 313
AIRTECH
3813-08 KPP
FIRESTONE
1T 19 L-1 W01 358 9121
GOOD-YEAR
1 R 13-038
OEM CODE
HENDRICKSON S3467-S3830-C22173-B-12514-008-B12514--010
DAYTON 352-9122
LOADGUARD SC2041
NAVISTAR 554772C1
NEWAY 90557020-90557071-90557076-90557077-9055785
RIDEWELL 1003589122C
SAUER P50-732
TRIANGLE 8313
GRANNING 12883-02

REMARKS

WEIGHT
2874
MATERIAL
PA66 GF30 BLACK
QUANTITY IN PALETTE
100 pcs

FRONT VIEW

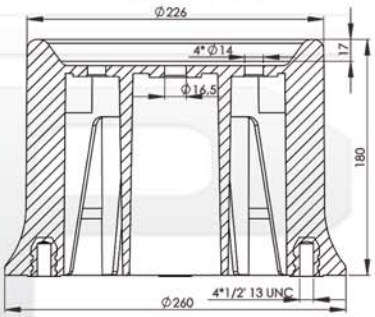

BOTTOM VIEW

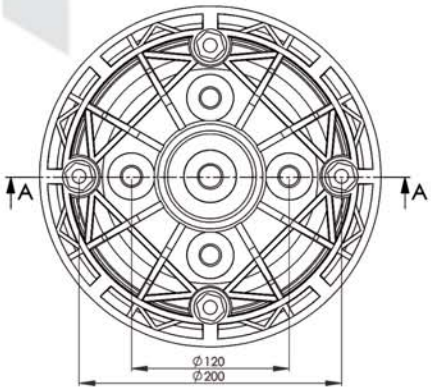

ORDER NUMBER : 025.15.02.003

CROSS REFERENCE

CONTITECH
6251
FIRESTONE
1 T 15 AA-3 W01 M58 6251
1 T 15 AA-3 W01 M58 6307

AIRTECH
3625 KPP

OEM CODE
SCANIA 1314904
GRANNING 15619

REMARKS

WEIGHT
1234

MATERIAL
PA66 GF30 BLACK

QUANTITY IN PALETTE
100 pcs

FRONT VIEW

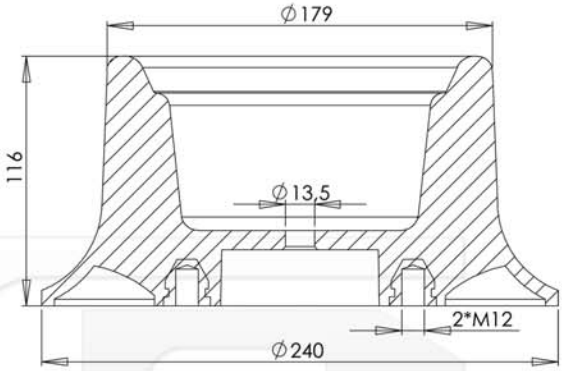

BOTTOM VIEW

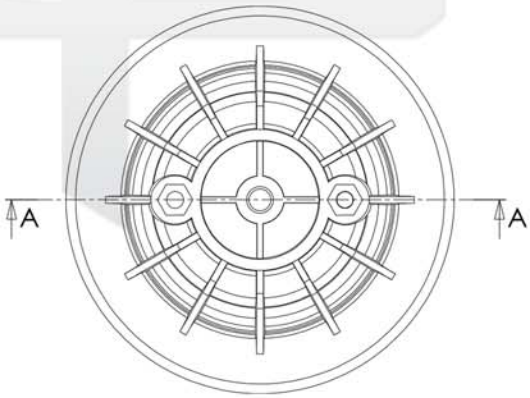

ORDER NUMBER : 025.16.02.004

CROSS REFERENCE

FIRESTONE
2 T 15 S-11 W01 M58 7315

OEM CODE

REMARKS

WEIGHT
1990

MATERIAL
PA66 GF30 BLACK

QUANTITY IN PALETTE
100 pcs

FRONT VIEW

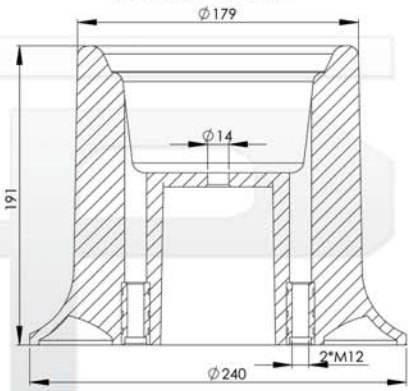

BOTTOM VIEW

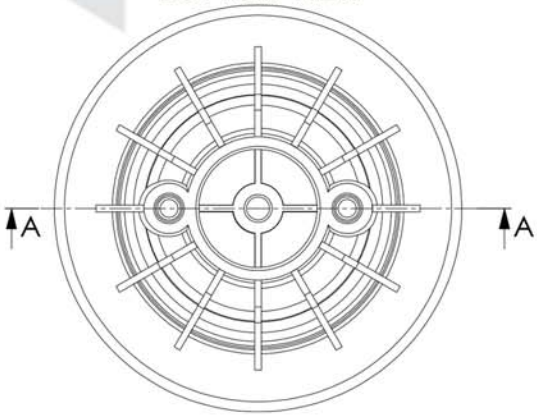

ORDER NUMBER : 025.04.02.004

CROSS REFERENCE

CONTITECH
4519 N P04
4519 N P12
9 10-19 P321
AIRTECH
34159-07 KPP
34159-12 KPP
34159-06 KPP
FIRESTONE
1T15 M9 W01 M58 9101
1T15 M9 W01 M58 9130
GOOD-YEAR
1R12-167
1R12-281
1R12-103
PHOENIX
1 DK 20 B-1
CF GOMMA
1 T323-40
OEM CODE
Transpart-531 233
HENDRICKSON B 3842
NEWAY 90557 008 /009/ 082
REMARKS
WEIGHT
2234
MATERIAL
PA66 GF30 BLACK
QUANTITY IN PALETTE
100 pcs

FRONT VIEW

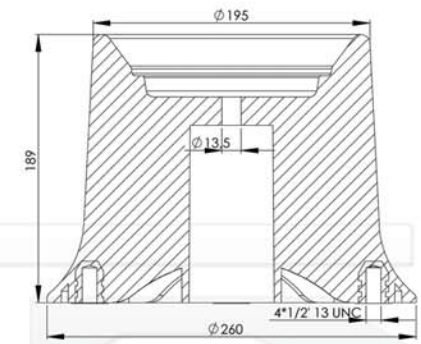

BOTTOM VIEW

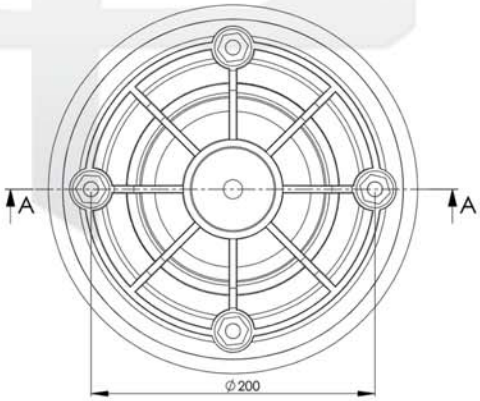

ORDER NUMBER : 025.04.02.003

CROSS REFERENCE

CONTITECH
4159 N P14
AIRTECH
34159-04 KPP
34159-10 KPP
FIRESTONE
1T15 M9 W01 M58 7548
1T15 M9 W01 M58 9222
GOOD-YEAR
1 R 12-721
CF GOMMA
1T323 40
PHOENIX
1 DK 12 BB
OEM CODE
MONTENEGRO
SAMRO 250 04 25
FRUEHAUF UJA 0894 001
NEVAY M00 557 007

REMARKS

WEIGHT
2234
MATERIAL
PA66 GF30 BLACK
QUANTITY IN PALETTE
100 pcs

FRONT VIEW

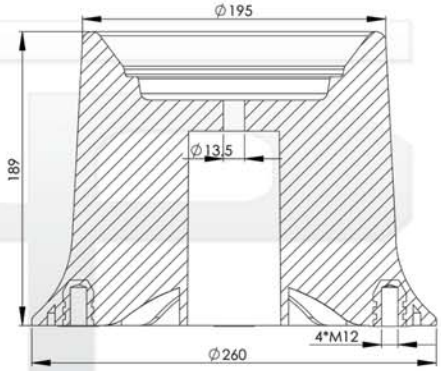

BOTTOM VIEW

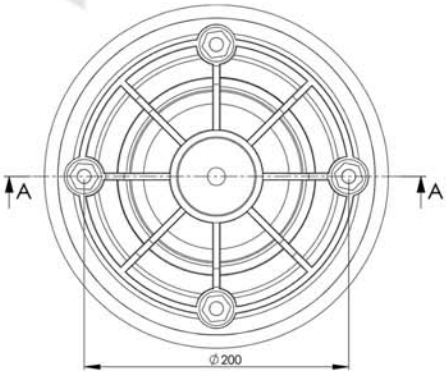

ORDER NUMBER : 027.00.02.000

CROSS REFERENCE

AIRKRAFT
203001 K
204001 K
205001 K
206001 K
207001 K
208001 K

TYPE
SACHS With Shock Absorber

VEHICLE
MAN F 2000 (Front)
MAN F 2000 (Rear)
Mercedes Aktros (Rear)

REMARKS

WEIGHT
345
MATERIAL
PA66 GF25 BLACK

ORDER NUMBER : 027.01.02.000

CROSS REFEFERENCE

AIRKRAFT
201180 K-212201
201181 K
128021-K

TYPE
SACHS With Shock Absorber

VEHICLE
SCANIA 94-114-144 (Front-Rear)

REMARKS

WEIGHT
225

MATERIAL
PA66 GF25 BLACK

ORDER NUMBER : 027.22.02.000

CROSS REFERENCE

AIRKRAFT
205001 K

TYPE
SACHS With Shock Absorber

VEHICLE
Mercedes Actros (Front)

REMARKS

WEIGHT

MATERIAL
PA66 GF25 BLACK

ORDER NUMBER : 027.16.02.000

CROSS REFERENCE

TYPE

VEHICLE

REMARKS

WEIGHT

MATERIAL
PA66 GF25 BLACK

ORDER NUMBER : 027.01.02.001

CROSS REFERENCE

AIRKRAFT

TYPE

VEHICLE

REMARKS

WEIGHT

MATERIAL
PA66 GF25 BLACK

ORDER NUMBER : 027.17.02.000

CROSS REFERENCE

AIRKRAFT
128010 K

TYPE

VEHICLE

REMARKS

WEIGHT
100

MATERIAL
PA66 GF25 BLACK

ORDER NUMBER : 027.18.02.000

CROSS REFERENCE

AIRKRAFT
128020-K

TYPE

VEHICLE

REMARKS

WEIGHT

MATERIAL
PA66 GF25 BLACK

ORDER NUMBER : 027.10.02.000

CROSS REFERENCE

AIRKRAFT
128010 K

TYPE

VEHICLE

REMARKS

WEIGHT
100

MATERIAL
PA66 GF25 BLACK

ORDER NUMBER : 027.08.02.000

CROSS REFERENCE
AIRKRAFT
128012 K-128.013-K
128014-K-128015-K
128016-K

TYPE

VEHICLE
SCANIA

REMARKS

WEIGHT

MATERIAL
PA66 GF25 BLACK

ORDER NUMBER : 027.19.02.000

CROSS REFERENCE

AIRKRAFT
208928 K
128022 K

TYPE

VEHICLE

REMARKS

WEIGHT

MATERIAL
PA66 GF25 BLACK

ORDER NUMBER : 027.03.01.003

CROSS REFERENCE

CONTITECH
SZ 51-7

AIRKRAFT
125101

TYPE
Seat Air Spring

VEHICLE
Pilot Seat

REMARKS

WEIGHT
110
MATERIAL
PA66 GF25 NATUREL

CABIN AIR SPRINGS PLASTIC PISTON

ORDER NUMBER : 027.08.02.000

CROSS REFERENCE

AIRKRAFT
128012 K-128.013-K-
128014-K-128015-K
128016-K

TYPE
Without Shock Absorber

VEHICLE
SCANIA

REMARKS

WEIGHT
100

CABIN AIR SPRINGS PLASTIC PISTON

ORDER NUMBER : 027.07.02.000

CROSS REFERENCE

AIRKRAFT
202186 K-121202
202187 K-

TYPE
MONROE With Shock Absorber

VEHICLE
SCANIA 94-114-144(Front)
SCANIA 94-114-144(Rear)

REMARKS

WEIGHT
275
MATERIAL
PA66 GF25 BLACK

CABIN AIR SPRINGS PLASTIC CAP

ORDER NUMBER : 027.03.01.002

CROSS REFERENCE

CONTITECH
SZ 51-5

AIRKRAFT
125102
125103
125104
125106

TYPE
Without Shock Absorber

VEHICLE

REMARKS

WEIGHT
100

MATERIAL
PA66 GF25 NATUREL

ORDER NUMBER : 027.02.02.000

CROSS REFERENCE

AIRKRAFT
101169 K-121101

TYPE
SACHS With Shock Absorber

VEHICLE
SCANIA 93-113-143 (Front-Rear)

REMARKS

WEIGHT
355
MATERIAL
PA66 GF25 BLACK

CABIN AIR SPRINGS PLASTIC CAP

ORDER NUMBER : 027.03.01.001

CROSS REFERENCE

CONTITECH
SZ 50-10

AIRKRAFT
121054

TYPE
Without Shock Absorber

VEHICLE
RENAULT G 340 Ti (Front-Rear)

REMARKS

WEIGHT
120

MATERIAL
PA66 GF25 NATUREL

ORDER NUMBER : 027.05.02.000

CROSS REFERENCE

CONTITECH
SZ 50-9

AIRKRAFT
121051

TYPE
Without Shock Absorber

VEHICLE
RENAULT V.I. PREMIUM (Front)

REMARKS

WEIGHT
100
MATERIAL
PA66 GF25 BLACK

ORDER NUMBER : 027.03.01.000

CROSS REFERENCE

CONTITECH
SZ 50-6

AIRKRAFT
212053

TYPE
Without Shock Absorber

VEHICLE
RENAULT G 340 Ti (Front-Rear)

REMARKS

WEIGHT
115

MATERIAL
PA66 GF25 NATUREL

ORDER NUMBER : 027.04.01.000

CROSS REFERENCE

AIRKRAFT
212053
125101
125102
125103
125104

TYPE
Without Shock Absorber

VEHICLE
RENAULT V.I. G 340 Ti
(Front-Rear)

REMARKS

WEIGHT
75
MATERIAL
PA66 GF25 NATUREL

ORDER NUMBER : 027.06.02.000

CROSS REFERENCE

CONTITECH
SZ 50-10

AIRKRAFT
121054

TYPE
Without Shock Absorber

VEHICLE
RENAULT G 340 Ti (Front-Rear)

REMARKS

WEIGHT
75

MATERIAL
PA66 GF25 BLACK

ORDER NUMBER : 027.12.02.000

CROSS REFERENCE

AIRKRAFT
125106

TYPE

VEHICLE

REMARKS

WEIGHT
75
MATERIAL
PA66 GF25 BLACK

CABIN AIR SPRINGS PLASTIC CAP

ORDER NUMBER : 027.14.02.000

CROSS REFERENCE

TYPE

VEHICLE

REMARKS

WEIGHT

MATERIAL
PA66 GF25 NATUREL

CROSS REFERENCE

ORDER NUMBER : 027.14.02.001

TYPE

VEHICLE

REMARKS

WEIGHT

MATERIAL
PA66 GF25 NATUREL

ORDER NUMBER : 027.23.02.000

CROSS REFERENCE

TYPE

VEHICLE

REMARKS

WEIGHT

MATERIAL
PA66 GF25 BLACK

ORDER NUMBER : 027.11.02.000

CROSS REFERENCE

TYPE

VEHICLE

REMARKS

WEIGHT

MATERIAL
PA66 GF25 BLACK

ORDER NUMBER : 027.09.02.000

CROSS REFERENCE

TYPE

VEHICLE

REMARKS

WEIGHT
55
MATERIAL
PA66 GF25 BLACK

ORDER NUMBER : 027.21.02.000

CROSS REFERENCE

TYPE

VEHICLE

REMARKS

WEIGHT

MATERIAL
PA66 GF25 BLACK

ORDER NUMBER : 003.11.02.000

ORDER NUMBER : 006.09.02.000

ORDER NUMBER : 006.10.02.000

ORDER NUMBER : 006.12.02.000

ORDER NUMBER : 006.15.02.000

ORDER NUMBER : 006.23.02.000

ORDER NUMBER : 012.25.02.000

ORDER NUMBER : 012.38.02.000

ORDER NUMBER : 012.40.02.000

ORDER NUMBER : 012.41.02.000

ORDER NUMBER : 012.50.02.000

ORDER NUMBER : 012.69.02.000

ORDER NUMBER : 012.70.02.000

ORDER NUMBER : 012.74.02.000

ORDER NUMBER : 012.76.02.000

ORDER NUMBER : 012.77.02.000

GÜRPLAST

Yeni Yalova Yolu 12. km. Ovaakca Mevkii
No: 353-355 BURSA / TÜRKİYE

Tel : +90.224. 267 20 04
+90.224. 267 21 86
Fax : +90.224. 267 21 97

www.gur-plast.com
e-mail:info@gur-plast.com